Hybrid Parity (Super) Inverter



DATASHEET

3.6kW/5.5kW/8.8kW PLUS PARALLEL VERSION

SUNSYNK-8K-SG01LP1 SUNSYNK-5K-SG03LP1 SUNSYNK-8K-SG02LP1 SUNSYNK-7.6K-SG02LP1 SUNSYNK-6K-SG02LP1 SUNSYNK-5K-SG02LP1 SUNSYNK-3.6K-SG02LP1

Global Tech China Ltd, 3 Floor, Wai Yip Industrial Building.171 Wai Yip Street,
Kwun Tong, Kowloon, Hong Kong.
Tel: +852 2884 4318 Fax: +8522884 4816
www.sunsynk.com / sales@globaltech-china.com / www.globaltechhk.com

Version 3.0 (12/08/2020)

All these models fall into two cabinet / PCB types 5.5kW (Small) and 8.8kW (Large):
5kW Type:
SUNSYNK-5K-SG02LP1
SUNSYNK-3.6K-SG02LP1
SUNSYNK-6K-SG02LP1
SUNSYNK-5K-SG03LP1

8.8 kW Type
SUNSYNK-8K-SG01LP1
SUNSYNK-8K-SG02LP1
SUNSYNK-7.6K-SG02LP1



Index

1. SYSTEM OVERVIEW 4

2. TECHNICAL SPECIFICATION 6

2.1. SYSTEM DIAGRAM 8

3. OPERATION 9

3.1. HOME PAGE 9
3.2. STATUS PAGE 10
3.3. SYSTEM FLOW PAGE 11
3.4. ADVANCED SETTINGS FOR PARALLELING INVERTERS 12
3.5. SOLAR POWER GENERATED 13
3.6. GRID POWER 14

1. SYSTEM OVERVIEW

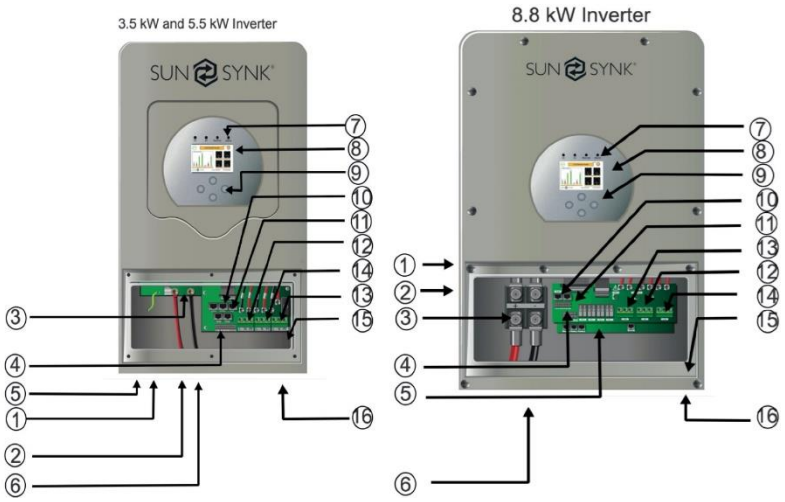

1. PV isolator
2. Power ON/OFF
3. Battery input connectors
4. I/O Ports
5. MPPT 1 and MPPT 2 inputs
6. Battery cable compression gland
7. Inverter LED indicators
8. LCD display
9. Function buttons
10. RS485 port
11. CAN bus port
12. Generator / Aux IN/OUT
13. On-grid inverter
14. Load off-grid inverter
15. Ground connection
16. Data logger

The Sunsynk Hybrid Parity Inverter is a highly efficient power management tool that allows the user to hit those 'parity' targets by managing power flow from multiple sources such as solar, main electrical grids, and generator, and then effectively storing and releasing electric power as the utilities require.

INTERACTIVE

- Easy and simple to understand display
- Supporting Wi-Fi or GSM monitoring
- Visual power flow screen
- Built-in 2 strings of MPP trackers
- Smart settable 3-stage MPPT charging for optimized battery performance
- Auxiliary load function
- Parallel / multi invert function grid-tied and off-grid

COMPATIBLE

- Compatible with main electrical grid voltages or power generators
- Compatible with wind turbines
- 220V single phase, pure sinewave inverter
- Self-consumption and feed-in to the grid
- Auto restart while AC is recovering
- Auto earth bond feature (Via a relay)

CONFIGURABLE

- Fully programmable controller

- Programmable supply priority for battery or grid
- Programmable multiple operation modes: on-grid/off-grid & UPS
- Configurable battery charging - current/voltage based on applications by LCD setting
- Configurable AC / solar / generator charger priority by LCD setting

SECURE

- Overload/over-temperature/short-circuit protection
- Smart battery charger design for optimized battery protection
- Limiting function installed to prevent excess power overflow to grid

APPLICATIONS

- Marine (vessel power management)
- Power shedding (home/office/factory)
- UPS (fuel-saving systems)
- Remote locations with solar and wind generators
- Building sites
- Military locations
- Telecommunication

2. TECHNICAL SPECIFICATION

■ **SUNSYNK-3.6K-SG02LP1 and SUNSYNK-5K-SG03LP1**

Model	**SUNSYNK-3.6K-SG02LP1**	**SUNSYNK-5K-SG03LP1**
Battery Input Data		
Battery Type	Lead-acid or Lithium-ion	
Battery Voltage Range (V)	40~60V	
Max. Charging Current (A)	90A	120A
Max. Discharging Current (A)	90A	120A
Charging Curve	3 Stages/Equalisation	
External Temperature Sensor	Optional	
Charging Strategy for Li-Ion Battery	Self-Adaptation to BMS	
PV String Input Data		
Max. DC Input Power (W)	4680W	6500W
PV Input Voltage (V)	370V (100V~500V)	
MPPT Range (V)	125~425V	
Full Load DC Voltage Range (V)	240~425V	
Start-up Voltage (V)	150V	
PV Input Current (A)	11A+11A	
No. of MPPT Trackers	2	
No. of Strings Per MPPT Tracker	1+1	
AC Output Data		
Rated AC Output and UPS Power (W)	3600W	5000W
Max. AC Power (W)	3960W	5500W
Peak Power (off-grid)	2 times of rated power, 10 S	
AC Output Rated Current (A)	15.7A	21.7A
Max AC Output Current (A)	18A	25A
Max Continuous AC Passthrough (A)	35A	
Power Factor	0.8 leading to 0.8 lagging	
Output Frequency and Voltage	50/60Hz; 220/230/240Vac (single phase)	
Grid Type	Single Phase	
Current Harmonic Distortion	THD<3%(Linear load<1.5%)	
Efficiency		
Max. Efficiency	97.60%	
MPPT Efficiency	96.50%	
Euro Efficiency	99.90%	
Protection		
PV Input Lightning Protection	Integrated	
Anti-islanding Protection	Integrated	
PV String Input Reverse Polarity Protection	Integrated	
Insulation Resistor Detection	Integrated	
Residual Current Monitoring Unit	Integrated	
Output Over Current Protection	Integrated	
Output Shorted Protection	Integrated	
Output Over Voltage Protection	Integrated	
Certifications and Standards		
Grid Regulation	VDE 0126, AS4777, NRS2017, G98, G99, IEC61683, IEC62116, IEC61727, RD1699:2011, XP C15-712-3:2019-05	
Safety Regulation	IEC62109-1, IEC62109-2	
EMC	EN61000-6-1, EN61000-6-3	
General Data		
Operating Temperature Range (℃)	-25~60°C, >45°C Derating	
Cooling	Fan	
Noise (dB)	<30	

Communication with BMS	RS485; CAN
Weight (kg)	20.5
Size (Length x Width x Height)	580 x 330 x 208 mm
Protection Degree	IP65
Installation Style	Wall-mounted
Warranty	5 years
Maximum Altitude	4000 m

■ **SUNSYNK-5K-SG02LP1, SUNSYNK-6K-SG02LP1, SUNSYNK-7.6K-SG02LP1, SUNSYNK-8K-SG01LP1, and SUNSYNK-8K-SG02LP1**

Model	**SUNSYNK-5K-SG02LP1**	**SUNSYNK-6K-SG02LP1**	**SUNSYNK-7.6K-SG02LP1**	**SUNSYNK-8K-SG01LP1/ SUNSYNK-8K-SG02LP1**
Battery Input Data				
Battery Type	Lead-acid or Lithium-ion			
Battery Voltage Range (V)	40~60V			
Max. Charging Current (A)	120A	135A	190A	190A
Max. Discharging Current (A)	120A	135A	190A	190A
Charging Curve	3 Stages/Equalisation			
External Temperature Sensor	Optional			
Charging Strategy for Li-Ion Battery	Self-Adaptation to BMS			
PV String Input Data				
Max. DC Input Power (W)	6500W	7800W	9880W	10400W
PV Input Voltage (V)	370V (100V~500V)			
MPPT Range (V)	125~425V			
Start-up Voltage (V)	150V			
PV Input Current (A)	11A+11A	18A+9A	22A+22A	22A+22A
No. of MPPT Trackers	2			
No. of Strings Per MPPT Tracker	1+1	2+1	2+2	2+2
AC Output Data				
Rated AC Output and UPS Power (W)	5000W	6000W	7600W	8000W
Max. AC Power (W)	5500W	6600W	8360W	8800W
Peak Power (off-grid)	2 times of rated power, 10 S			
AC Output Rated Current (A)	20.8A	25A	31.7A/33A	33.4A/35A
Max AC Output Current (A)	24A	28.8A	36.4A/38A	38.3A/40A
Max Continuous AC Passthrough (A)	48A	80A	90A	90A
Output Frequency and Voltage	50/60Hz; 120/240Vac(split phase), 208Vac(2/3), 230Vac(single phase)			
Grid Type	Split phase, 2/3 phase, Single phase			
Current Harmonic Distortion	THD<3%(Linear load<1.5%)			
Efficiency				
Max. Efficiency	97.60%			
MPPT Efficiency	96.50%			
Euro Efficiency	99.90%			
Protection				
PV Arc Fault Detection	Integrated (Except European Type)			
PV Input Lightning Protection	Integrated			
Anti-islanding Protection	Integrated			
PV String Input Reverse Polarity Protection	Integrated			
Insulation Resistor Detection	Integrated			
Residual Current Monitoring Unit	Integrated			
Output Over Current Protection	Integrated			
Output Shorted Protection	Integrated			

Output Over Voltage Protection	Integrated
Certifications and Standards	
Grid Regulation	UL1741, IEEE1547, RULE21, VDE0126, AS4777, NRS2017, G98,G99, IEC61683, IEC62116, IEC61727
Safety Regulation	IEC62109-1, IEC62109-2
EMC	EN61000-6-1, EN61000-6-3, FCC 15 Class B
General Data	
Operating Temperature Range (℃)	-25~60°C, >45°C Derating
Cooling	Fan
Noise (dB)	<30
Communication with BMS	RS485; CAN
Weight (kg)	32
Size (Length x Width x Height)	670 x 420 x 233 mm
Protection Degree	IP65
Installation Style	Wall-mounted
Warranty	5 years
Maximum Altitude	4000 m

2.1. System Diagram

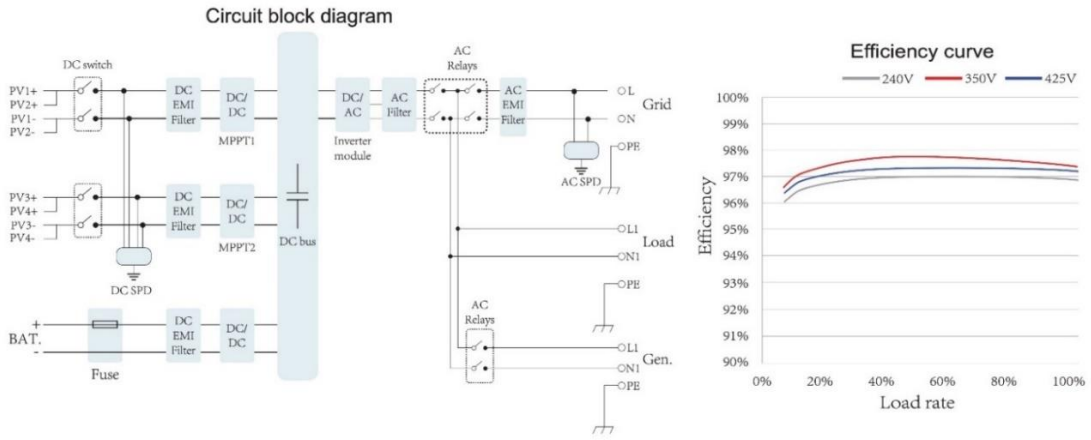

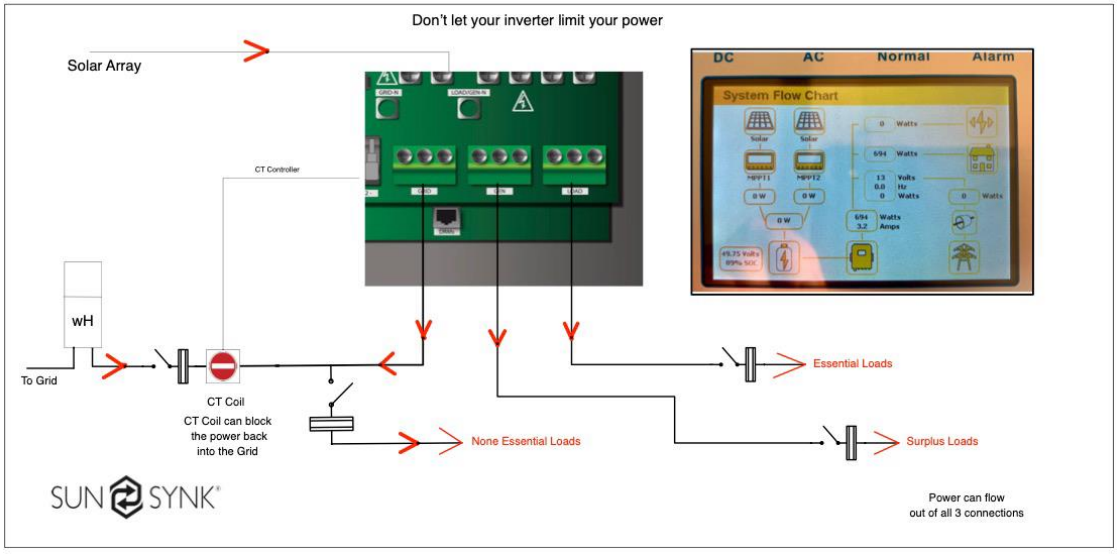

3. OPERATION

3.1. Home Page

Press Esc button any page to access the home page:

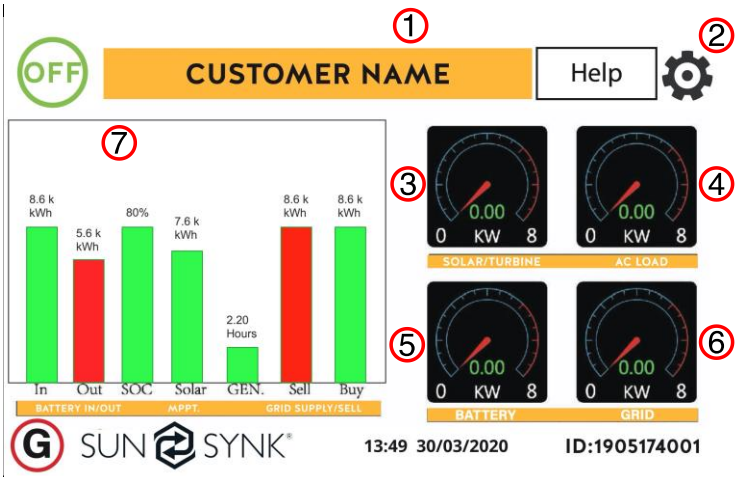

1. Customer name
2. Access settings menu page
3. Access solar history
4. Access system status page
5. Access system status page
6. Access grid history
7. Access system flow page

Daily readings **Real time readings**

What this page displays:

- Total daily power into the battery (kWh).
- Total daily power out of the battery (kWh).
- SOC (State of charge of the battery) (%).
- Total daily solar power produced in (kWh).
- Total hourly usage of the generator (Time).
- Total daily power sold to the grid (kWh).
- Total daily power bought from the grid (kWh).
- Real-time solar power in (kW).
- Real-time load power in (kW).
- Real-time battery charge power in (kW).
- Real-time grid power in (kW).
- Serial number.
- Time date.
- Fault condition.
- Access stats pages.
- Access status page.
- Access fault diagnostic page.

3.2. Status Page

To access the Status page, click on the “Battery” or “AC Load” dial on the Home page.

What this page displays:

- Total solar power produced.
- MPPT 1 power/voltage/current.
- MPPT 2 power/voltage/current.
- Grid power.
- Grid frequency.
- Grid voltage.
- Grid current.
- Inverter power.
- Inverter frequency.
- Inverter voltage.
- Inverter current.
- Load power.
- Load voltage.
- Battery power charge/discharge.
- Battery SOC.
- Battery voltage.
- Battery current.
- Battery temperature.

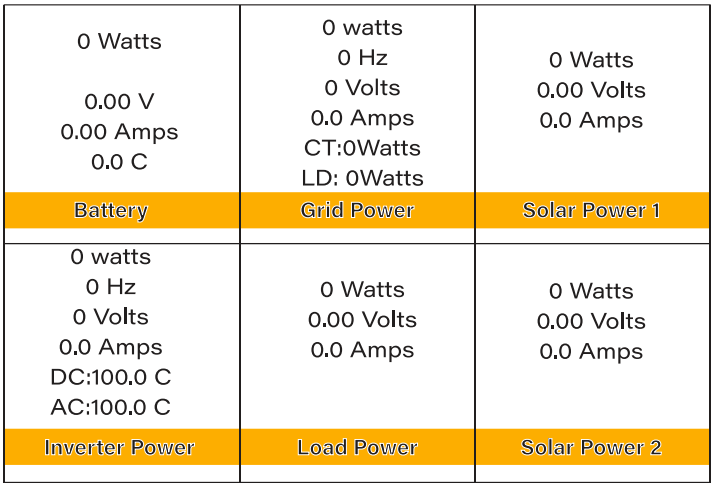

Solar Column: Shows total PV power at the top and then details of each of the two MPPT’s below L1 & L2 voltage.

Grid Column: Shows grid total power, frequency, voltage, and current. When selling to grid the power is negative. When receiving from the grid the power is positive. If the sign of the grid and HM powers are not the same when the PV is disconnected and the inverter is only taking energy from the grid and using the HM CT connected to Limit-2 then please reverse the polarity of the HM current sensor. **Important**: See section on CT coil.

Inverter Column: Showing inverter total power, frequency, L1, L2, voltage, current, and power.

Load Column: Showing total load power, load voltage, and power on L1 and L2.

Battery Column: Showing total power from the battery, battery SOC, battery voltage, battery current (negative means charge, positive means discharge) battery temperature (shows zero if the battery temperature sensor is not connected). DC transformer temperature and AC heatsink temperature (When the temperature reaches 90°C it will show in red and start deteriorating when it reaches 110°C. Next, the inverter will shut down to allow it to cool and reduce its temperature.

3.3. System Flow Page

Access by clicking on the “Bar Chart ” on the home page

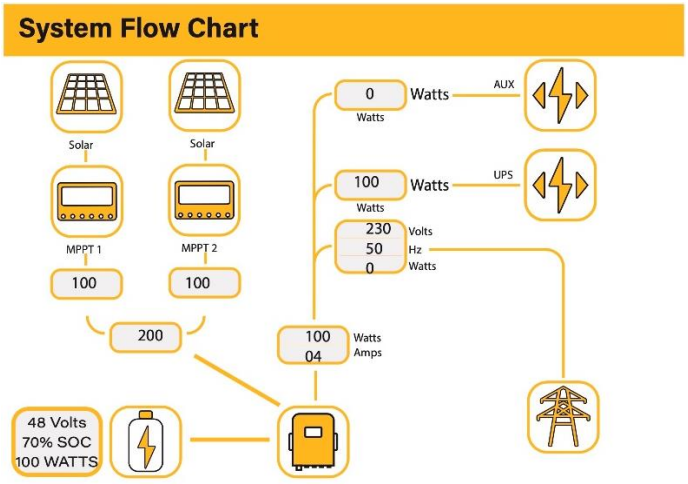

What this page displays:

- The system flow.
- MPPTs power.
- Battery status.
- Power distribution to load or grid.

To better understand the functioning of your system, take a look at the figure bellow:

1. The PV modules charge the batteries.
2. When the batteries reach a specific level (programmable) the battery power is fed into the inverter.
3. The inverter can then supply power to the grid (export or no export), load, and auxiliary or smart load.
4. CT coil controls the export power.

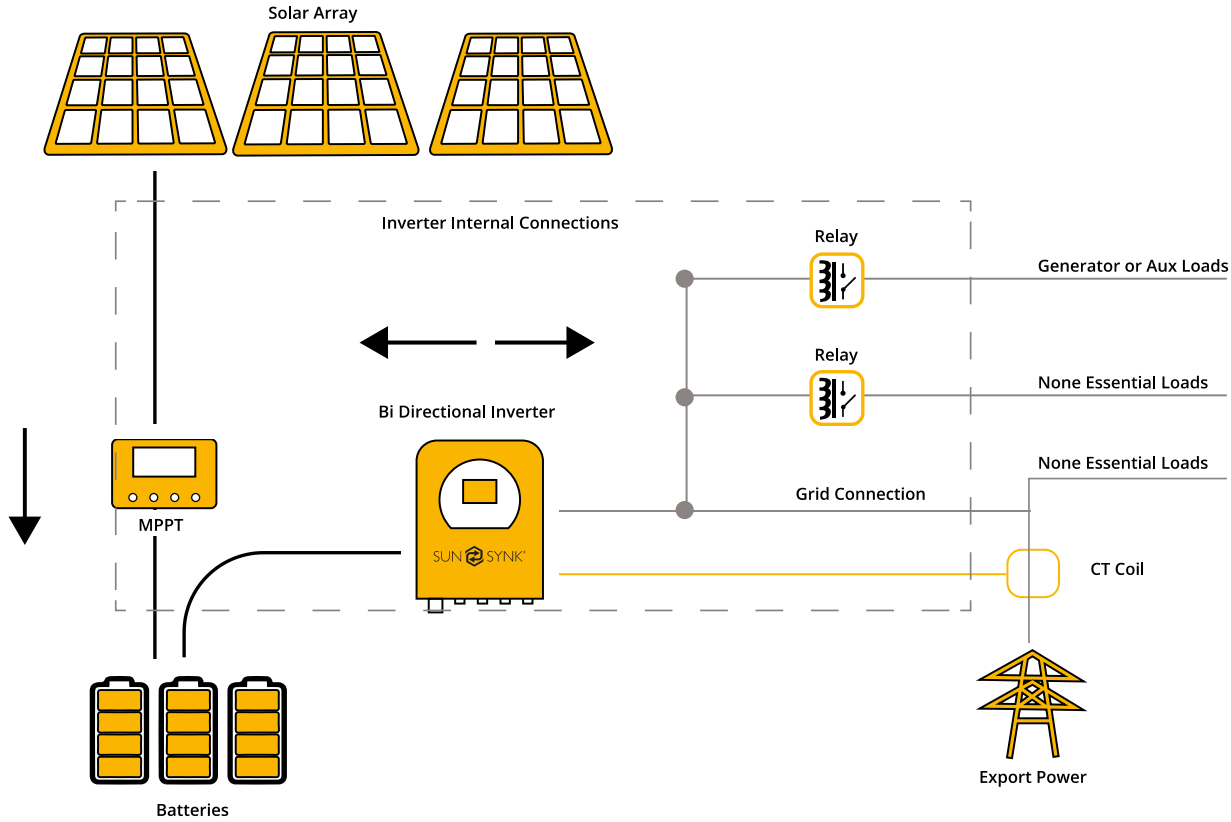

3.4. Advanced Settings for Paralleling Inverters

To configure multi-inverter settings click on the “Advance” icon.

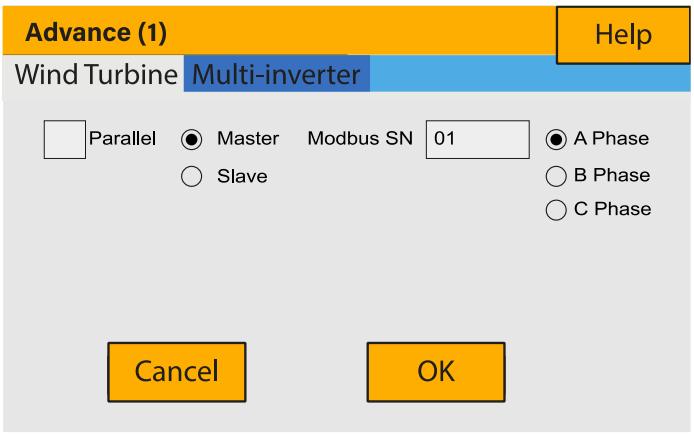

What this page displays:

- If the inverter operates as a master or a slave.
- Modbus Device ID, which must be unique for each inverter connected to the bus/wire.

What you can do from this page:

- Set the inverter as a master or slave per bus/wire.
- Set the phase in which the inverter will be paralleled.
- Set the Modbus SN for paralleling.

The Sunsynk parity inverter can be wired standalone or where more power is required it can be connected in parallel either single or 3 phase configuration. The maximum number of inverters that can be paralleled in a single phase utility grid is three (10.8kW, 16.5kW, and 26.4kW for the 3.6kW, 5.5kW, and 8.8 kW model, respectively) and the maximum number that can be paralleled in a three phase utility grid is nine (32.4kW, 49.5kW, and 79.2kW for the 3.6kW, 5.5kW, and 8.8 kW model, respectively).

To parallel six inverters in a three phase utility grid is necessary to set three inverters as master and three as slaves:

- Phase A: Master A and Slave A
- Phase B: Master B and Slave B
- Phase C: Master C and Slave C

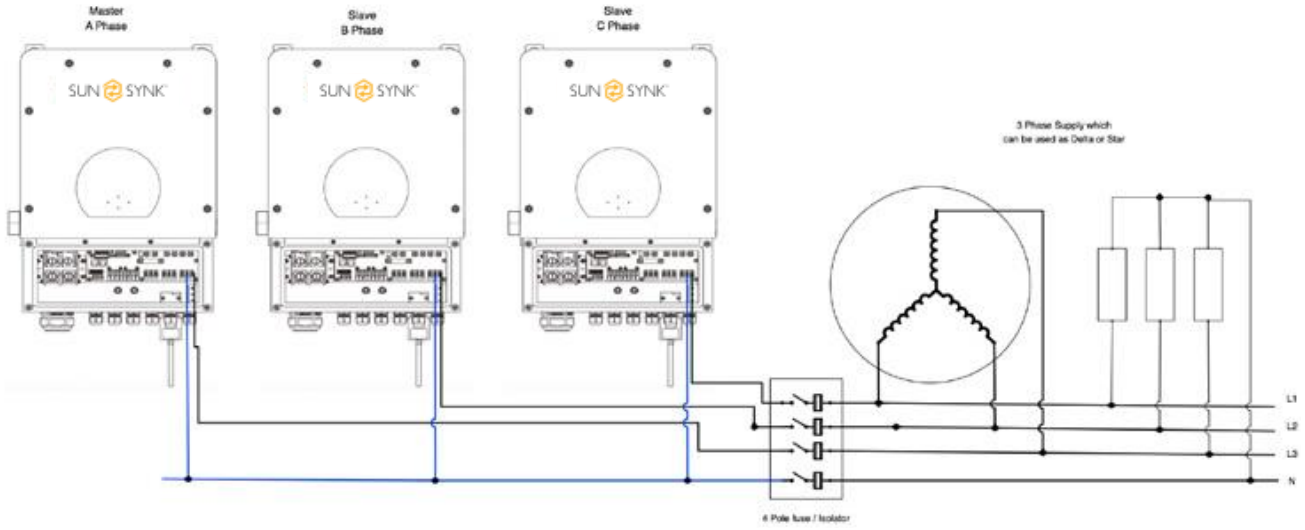

For stability, all the batteries need to be connected in parallel. It is recommended a minimum cable size of 50mm diameter with fuse isolators to each inverter.

Each invert will require a fuse isolator with surge protection and each group circuit will require an RCD. If the batteries as supplying power to the main load during the outage then a change over switch will also be required or a split load can be used.

3.5. Solar Power Generated

This page shows the daily, monthly, yearly, and total solar power produced. Access this page by clicking on the “Solar/Turbine” icon on the home page.

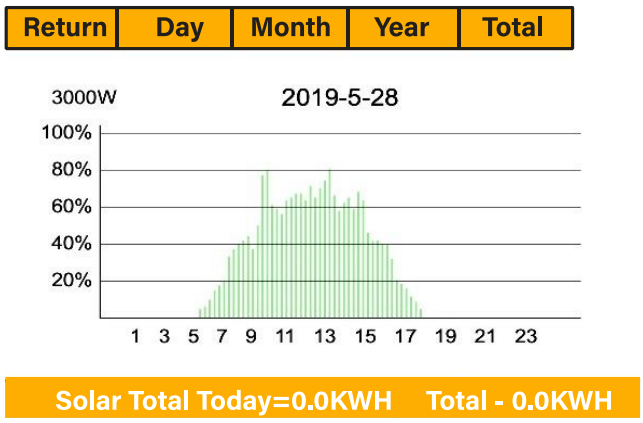

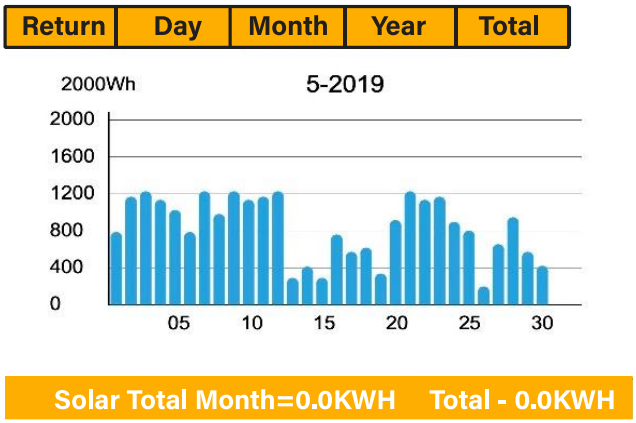

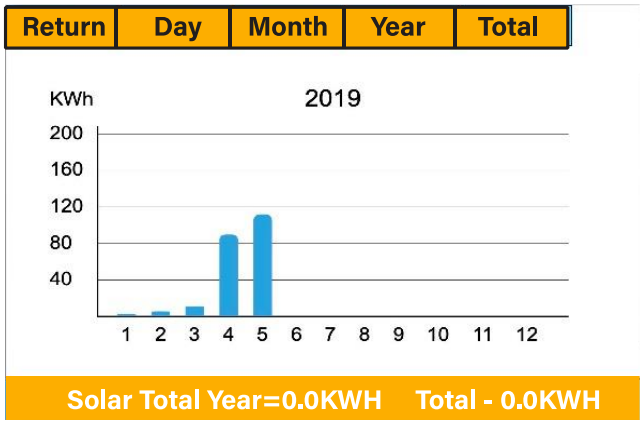

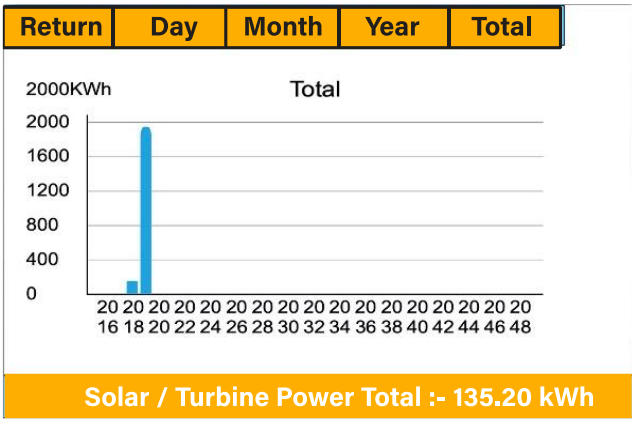

3.6. Grid Power

This page shows the daily, monthly, yearly, and total grid power export or consumed. Access this page by clicking on the “Solar/Turbine” icon on the home page.

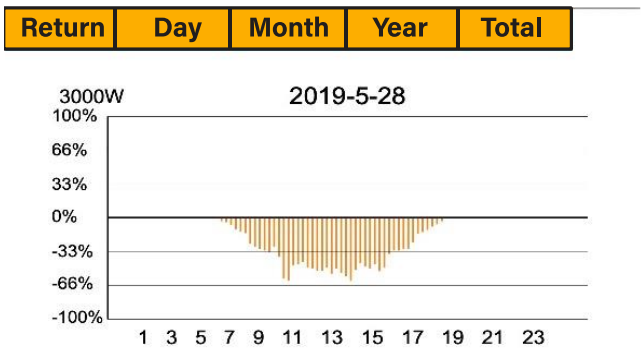

Grid Power Import / Export :- Day

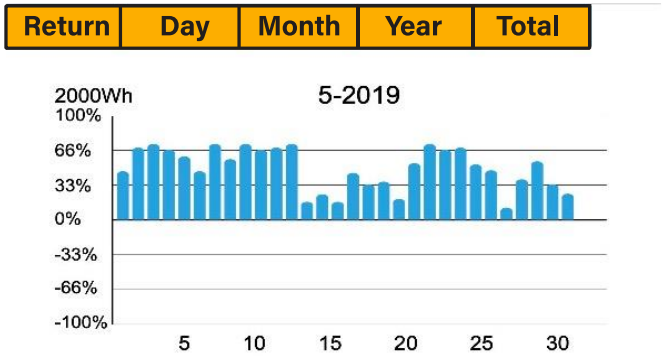

Grid Power Import / Export :- Month

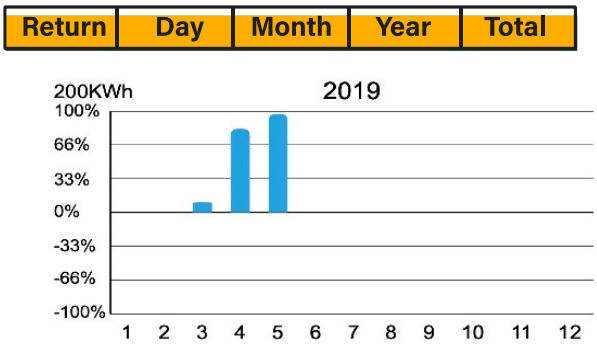

Grid Power Import / Export :- Year

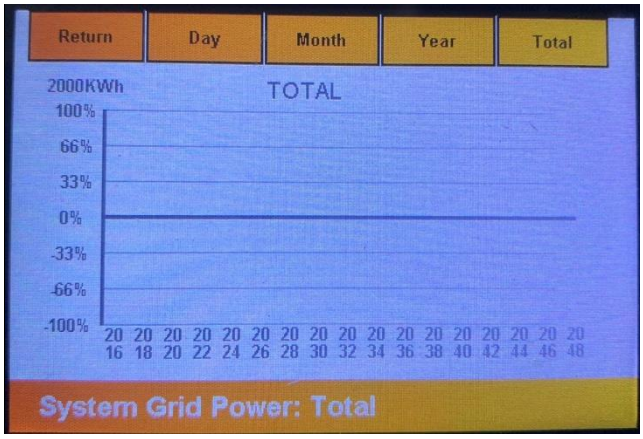

Global Tech China Ltd, 3 Floor, Wai Yip Industrial Building.171 Wai Yip Street,
Kwun Tong, Kowloon, Hong Kong.
Tel: +852 2884 4318 Fax: +8522884 4816
www.sunsynk.com / sales@globaltech-china.com / www.globaltechhk.com